A Co-Array Approach to Multi-Source 2D-DOA Estimation with Time-Multiplexed Array Elements

Jannik Springer, Clemens Allmann and Marc Oispuu
Dept. Sensor Data and Information Fusion
Fraunhofer Institute for Communication, Information Processing and Ergonomics (FKIE)
Wachtberg, Germany
{jannik.springer, clemens.allmann, marc.oispuu}@fkie.fraunhofer.de

***Abstract*—This paper addresses the problem of multi-source direction finding with a system that employs fewer receivers than sensors. We propose a new system architecture, specifying a time-multiplex scheme together with a refined array geometry. The proposed array geometry consists of a centrosymmetric prototype array that is connected to the receiver through a switch and multiple reference elements that are directly connected to the receiver. Under the assumption of wide-sense stationary source signals, it is possible to reconstruct the array signals of the prototype array, as if it was sampled simultaneously. The resulting signals are amenable to conventional array processing techniques and direction of arrival (DOA) estimators such as the MUltiple SIgnal Classification (MUSIC) method. The processing steps exploit the geometry of co-arrays constructed at each switch position relating to the time-multiplex scheme. The problem of fully coherent equivalent source signals, inherent to the co-array approach, is mitigated by spatial smoothing. Finally, the proposed technique is verified using numerical experiments and compared to the Cramér-Rao lower bound (CRLB).**

***Index Terms*—antenna array, switched element, time-varying array, co-array, more sensors than receivers, Direction Finding, DOA (estimation), AOA, coherent sources**

I. Introduction

The problem of finding the directions of arrival (DOAs) of multiple planar electromagnetic waves using antenna arrays is well-known and has been extensively studied in the past. Direction finding (DF) is a key enabler for applications like passive emitter localization, navigation or communication and therefore of high theoretical and practical interest. Commonly, direction finding and so-called super-resolution algorithms require the array to be sampled simultaneously. Thus, a complete receiver channel, consisting of an analog front-end and a digital data path, is required for each antenna.

In order to reduce hardware costs and system complexity, different techniques have been proposed and implemented to decrease the number of required receiver channels, without decreasing the total number of antenna elements. This is commonly achieved by analog pre-processing, which can be roughly divided into three categories: time-varying pre-processing or beamforming [1], time-multiplexing or switching [2]–[5] (schematically depicted in Fig. 1) and finally approaches based on (random) combiner networks or compressive sampling [6]. In this paper, the focus is drawn towards the second category.

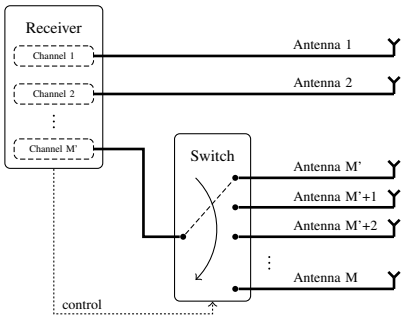

Fig. 1: System block diagram of an antenna array with more sensors than receivers.

Sheinvald et al. derived the maximum likelihood estimator (MLE) and proposed a computationally simplified approximation also known as generalized least-squares (GLS) estimator for the data of sub-arrays that are sequentially sampled [2]. In [1], these estimators are applied to the output of a time-varying pre-processing network (or beamformer) and their performance is compared to the Cramér-Rao lower bound (CRLB). The authors of [3] presented a technique that aims at directly reconstructing the spatial covariance matrix of an antenna array from the output of a sequentially sampled array using two receiver channels. Though, this *direct augmented* covariance matrix is not guaranteed to be Hermitian, possibly degrading the performance of subsequent estimators. Wu et al. presented a root minimum variance distortionless response (MVDR) DF algorithm for the output of a switched-element system [4] and compared it to the CRLB. In our previous work [5], we presented a two-channel receiver architecture, that employs a single switch and a fixed reference element. By normalizing the multiplexed channel to the reference channel and restructuring the received signals, the sources' DOA can be estimated using conventional DF techniques.

Recently, co-arrays have gained a lot of attention [7]–[11], as they offer the potential of resolving more sources than sensors. The co-array model relies on the conventional array model and creates a new virtual (co-)array, solely based on the difference positions of the physical array. The resulting co-array has a greater number of (virtual) elements than the physical array, but not all of the element positions are unique. However, if the number of unique element positions is greater than the number of physical elements, the degrees

of freedom (DOF) are increased, allowing to identify more sources than sensors. In the past, different (linear) array geometries, including minimum redundancy, co-prime and nested arrays [10]–[12], have been proposed in order to reduce the number of redundant positions. Fewer publications focus on two dimensional array geometries, or circular arrays, which would allow to unambiguously estimate the 2D-DOA angles.

While increasing the DOF, co-array techniques often suffer from rank deficient observation matrices, as the equivalent source signals of the co-array model are merely the source signal powers, behaving like fully coherent sources [10]. The following three techniques have been commonly accepted as the solution to this problem:

- Quasi-stationary sources (i.e. with time-varying signal powers) [9],
- Direct augmented covariance matrices [7], [10], [11],
- Spatially smoothed covariance matrices [7], [10], [11].

For the last two approaches a quadratic relationship can be established [11]. Moreover, we do not necessarily assume the source powers to vary over time, therefore we will focus on the spatial smoothing approach.

In this paper, we propose a new processing technique and array geometry for a time-multiplexed receiver system. Making weak assumptions for the source signals (i.e. wide-sense stationary), the received data can be pre-processed and restructured, resulting in a well-behaved sufficient statistic for estimating the DOA angles. The proposed array model is, in contrast to existing techniques [1]–[5], amenable to conventional super-resolution techniques like MUltiple SIgnal Classification (MUSIC) [13] and can resolve more sources than physically available receiver channels.

II. Direction Finding Problem

This section first introduces a generic model for the received signal of antenna arrays and co-arrays. Finally, implications of a time-multiplex receiver system are taken into account.

A. Array Data Model

We consider an antenna array composed of M sensor elements. We assume Q plane electromagnetic waves impinging on the array from the distinct directions $\boldsymbol{\theta}_q = (\alpha_q, \epsilon_q),\ q = 1, \ldots, Q$, with α and ϵ denoting the azimuth and elevation angles, respectively. Then, the k-th sample of the received signal $\boldsymbol{z}_k \in \mathbb{C}^M$ can be modeled as superposition of the narrowband source signals' complex envelope $\boldsymbol{s}_k \in \mathbb{C}^Q$ multiplied by the array transfer matrix $\boldsymbol{A} \in \mathbb{C}^{M\times Q}$ and Gaussian white noise $\boldsymbol{w}_k \in \mathbb{C}^M$:

$$\boldsymbol{z}_k = \boldsymbol{A}\boldsymbol{s}_k + \boldsymbol{w}_k, \tag{1}$$

$$\boldsymbol{A} = (\boldsymbol{a}_1, \ldots, \boldsymbol{a}_Q), \tag{2}$$

$$\boldsymbol{a}_q = \left(\mathrm{e}^{\mathrm{j}\frac{2\pi}{\lambda}\boldsymbol{d}_1^{\mathrm{T}}\boldsymbol{e}(\boldsymbol{\theta}_q)}, \ldots, \mathrm{e}^{\mathrm{j}\frac{2\pi}{\lambda}\boldsymbol{d}_M^{\mathrm{T}}\boldsymbol{e}(\boldsymbol{\theta}_q)}\right)^{\mathrm{T}}. \tag{3}$$

The columns of the array transfer matrix $\boldsymbol{A}$ are composed of the array transfer vectors $\boldsymbol{a}_q \in \mathbb{C}^M$ for each source, where λ is the wavelength, $\boldsymbol{d}_m \in \mathbb{R}^3$ is the sensor position for $m = 1, \ldots, M$ and $\boldsymbol{e}(\boldsymbol{\theta}_q)$ denotes the unit vector pointing from the array center to the q-th source. Commonly, the spatial covariance $\boldsymbol{R} \in \mathbb{C}^{M\times M}$ is computed, since it is a sufficient statistic for estimating the DOA angles $\boldsymbol{\theta}_q,\ q = 1, \ldots, Q$. It can be modeled as follows:

$$\boldsymbol{R} = \mathrm{E}\left[\boldsymbol{z}\boldsymbol{z}^{\mathrm{H}}\right] = \boldsymbol{A}\boldsymbol{P}\boldsymbol{A}^{\mathrm{H}} + \sigma_{\mathrm{w}}^2\boldsymbol{I}_M, \tag{4}$$

$$\boldsymbol{P} = \mathrm{E}\left[\boldsymbol{s}\boldsymbol{s}^{\mathrm{H}}\right], \tag{5}$$

were $\boldsymbol{P} \in \mathbb{C}^{Q\times Q}$ is the signal covariance matrix and σ_{w}^2 is the noise variance/power. In case of uncorrelated sources, $\boldsymbol{P}$ reduces to a diagonal matrix with the source powers σ_q^2:

$$\boldsymbol{P} = \mathrm{diag}(\boldsymbol{p}) = \mathrm{diag}(\sigma_1^2, \ldots, \sigma_Q^2). \tag{6}$$

This assumption is also required for the co-array model [10].

B. Co-array Data Model

Introducing the $\mathrm{vec}(\cdot)$ operation, that stacks the columns $\boldsymbol{c}_n, n = 1, \ldots, N$ of a matrix $\boldsymbol{C}$ into a single vector:

$$\boldsymbol{C} = (\boldsymbol{c}_1, \ldots, \boldsymbol{c}_N), \tag{7}$$

$$\mathrm{vec}(\boldsymbol{C}) = \left(\boldsymbol{c}_1^{\mathrm{T}}, \ldots, \boldsymbol{c}_N^{\mathrm{T}}\right)^{\mathrm{T}}, \tag{8}$$

the co-array model can be obtained by vectorizing the spatial covariance matrix $\boldsymbol{R}$, [9], [11]:

$$\begin{aligned}\boldsymbol{r} &= \mathrm{vec}\left(\boldsymbol{R}\right)\\ &= (\boldsymbol{A}^* \odot \boldsymbol{A})\boldsymbol{p} + \sigma_{\mathrm{w}}^2\boldsymbol{i}_M \in \mathbb{C}^{M^2}.\end{aligned} \tag{9}$$

Here, $\odot$ denotes the Khatri-Rao product (i.e. the column-wise Kronecker product) and $\boldsymbol{i}_M = \mathrm{vec}(\boldsymbol{I}_M)$ is the vectorized identity matrix $\boldsymbol{I}_M$. Equation (9) can also be interpreted as a new array model, where $\boldsymbol{A}_{\mathrm{co}} = \boldsymbol{A}^* \odot \boldsymbol{A} \in \mathbb{C}^{M^2\times Q}$ is the new array transfer matrix and $\boldsymbol{p} \in \mathbb{R}^Q$ is the vector representing the equivalent source signals

$$\boldsymbol{r} = \boldsymbol{A}_{\mathrm{co}}\boldsymbol{p} + \sigma_{\mathrm{w}}^2\boldsymbol{i}_M. \tag{10}$$

The new transfer matrix $\boldsymbol{A}_{\mathrm{co}}$ can be alternatively interpreted as the transfer matrix of a virtual array, whose positions solely depend on the difference positions $\boldsymbol{d}_{\mathrm{co},m},\ m = 1, \ldots, M_{\mathrm{co}}$ where $M_{\mathrm{co}} = M^2$, of the physical array:

$$\boldsymbol{A}_{\mathrm{co}} = (\boldsymbol{a}_{\mathrm{co},1}, \ldots, \boldsymbol{a}_{\mathrm{co},Q}), \tag{11}$$

$$\boldsymbol{a}_{\mathrm{co},q} = \left(\mathrm{e}^{\mathrm{j}\frac{2\pi}{\lambda}\boldsymbol{d}_{\mathrm{co},1}^{\mathrm{T}}\boldsymbol{e}(\boldsymbol{\theta}_q)}, \ldots, \mathrm{e}^{\mathrm{j}\frac{2\pi}{\lambda}\boldsymbol{d}_{\mathrm{co},M_{\mathrm{co}}}^{\mathrm{T}}\boldsymbol{e}(\boldsymbol{\theta}_q)}\right)^{\mathrm{T}}, \tag{12}$$

$$\boldsymbol{d}_{\mathrm{co},m} = \boldsymbol{d}_i - \boldsymbol{d}_j, 1 \le i, j \le M. \tag{13}$$

Not all M_{co} rows of the array transfer vectors $\boldsymbol{a}_{\mathrm{co},q}$ (12), are unique and can be removed prior to estimating the source DOAs.

If the number of unique rows $M_{\mathrm{co,unique}}$ is greater than the number of physical elements $M_{\mathrm{co}} > M_{\mathrm{co,unique}} > M$, the total number of DOF of the virtual array is increased. This allows to identify more sources than physical sensors available. Commonly, a selection matrix $\boldsymbol{B}$ is introduced, such that only the unique rows of $\boldsymbol{A}_{\mathrm{co}}$ are retained [11]:

$$\begin{aligned}\boldsymbol{y} &= \boldsymbol{B}\boldsymbol{r}\\ &= \boldsymbol{B}\boldsymbol{A}_{\mathrm{co}}\boldsymbol{p} + \sigma_{\mathrm{w}}^2\boldsymbol{B}\boldsymbol{i}_{\mathrm{M}}.\end{aligned} \tag{14}$$

By closely inspecting the co-array model (10), it can be noted, that the equivalent source signals $\boldsymbol{p}$ behave like fully coherent sources [10]. Therefore, a covariance or observation matrix computed from the co-array signals $\boldsymbol{r}$ might be rank-deficient. This can lead to severe performance degradations of subsequent DOA estimators. To mitigate this problem, one of the previously introduced approaches can be used. Since the source signals' powers do not necessarily vary with time, the *direct augmentation* or *spatial smoothing* technique can be applied.

Both approaches assume that the co-array is a uniform linear array (ULA), such that the array transfer vector $\boldsymbol{a}_{\mathrm{co,unique}}$ exhibits a Vandermonde structure. Then, the array can be partitioned into L sub-arrays of size M_l, such that $\boldsymbol{y}_l \in \mathbb{C}^{M_l}$ represents the output of the l-th sub-array (ULA segment). Following [10] and [11], a rank restored covariance matrix $\boldsymbol{R} \in \mathbb{C}^{M_l \times M_l}$ of the virtual (sub-)array can be computed as:

$$\boldsymbol{R}_{\mathrm{DA}} = (\boldsymbol{y}_{M_l}, \ldots, \boldsymbol{y}_1), \tag{15}$$

$$\boldsymbol{R}_{\mathrm{SS}} = \frac{1}{M_l} \sum_{l=1}^{L} \boldsymbol{y}_l \boldsymbol{y}_l^{\mathrm{H}}, \tag{16}$$

where (15) and (16) summarize the processing steps of the *direct augmentation* and *spatial smoothing* technique, respectively.

C. Time-Multiplex Receiver

We assume a receiver architecture as depicted in Fig. 1, exhibiting a total of $M' < M$ channels. This implies, that up to $M' - 1$ antenna elements can be directly connected to the receiver, while $M - M' + 1$ elements are connected through an analog switch to the M'-th receiver channel.

Introducing the switching index $v = 1, \ldots, V$, where $V = M - M' + 1$, that describes the switch position, the received signal $\boldsymbol{z}_{v,k} \in \mathbb{C}^{M'}$ can be similarly modeled to (1), by replacing the full arrays' transfer vector $\boldsymbol{a}_q$ with the time-varying array transfer vector

$$\boldsymbol{a}_{v,q} = \left(\mathrm{e}^{\mathrm{j}\frac{2\pi}{\lambda}\boldsymbol{d}_{v,1}^{\mathrm{T}}\boldsymbol{e}(\boldsymbol{\theta}_q)}, \ldots, \mathrm{e}^{\mathrm{j}\frac{2\pi}{\lambda}\boldsymbol{d}_{v,M'}^{\mathrm{T}}\boldsymbol{e}(\boldsymbol{\theta}_q)} \right)^{\mathrm{T}}, \tag{17}$$

such that $\boldsymbol{d}_{v,m},\ m = 1, \ldots, M'$, represent the array elements that are connected to a receiver channel for the v-th switch position. Conventionally, the total number of DOF is limited by the number of array elements M. The DOF of the time-multiplex system architecture are reduced to the number of receiver channels M' and hence the maximum number of identifiable sources is less than M'. Moreover, it is worth noting, that subspace algorithms like MUSIC are not directly applicable to the received data $\boldsymbol{R}_v \in \mathbb{C}^{M' \times M'}$ for the case $M' \leq Q$, since no signal/noise subspace can be found.

D. DOA Estimation Problem

The considered DOA estimation problem can be stated as follows: Estimate the source DOAs $\boldsymbol{\theta}_q$ for $q = 1, \ldots Q$ from all collected data covariance matrices $\hat{R}_v = \frac{1}{K}\sum_{k=1}^{K} \boldsymbol{z}_{v,k}\boldsymbol{z}_{v,k}^{\mathrm{H}}$ at each switch position $v = 1, \ldots, V$.

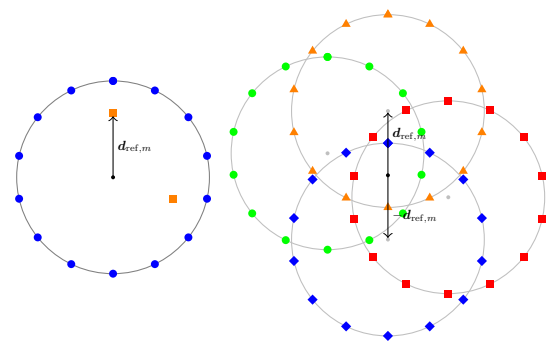

(a) Proposed physical array geometry (b) Resulting co-array geometry

Fig. 2: (a): The proposed geometry of the physical array can be separated into two parts: the positions of the reference elements are indicated by orange squares, while the (circular) prototype array is depicted as blue dotes.
(b): The combined co-array geometry exhibits four spatially shifted copies (sub-arrays) of the prototype array, each marked with dots, squares, diamonds and triangles.

III. Direction Finding Methods for Time-Multiplexed Receivers

This section first develops a new array model by combining the co-array model with a time-multiplex receiver. Subsequently an estimator for the two-dimensional source DOA angles is proposed.

A. Combined Co-Array Data Model

We propose a new array geometry and receiver architecture, consisting of at least one reference element and a prototype array. This is schematically depicted in Fig 2a, where the squares indicate the positions $\boldsymbol{d}_{\mathrm{ref},m},\ m = 1, \ldots, M' - 1$ of the reference elements and the dots depict the element positions $\boldsymbol{d}_{\mathrm{prot},m},\ m = 1, \ldots, M - M' + 1$ of the prototype array. Each reference element is assumed to be directly connected to a distinct receiver channel, while the elements of the prototype are assumed to be connected to a single receiver channel through a switch. We propose the following rules for constructing an array, whose signals are amenable to the proposed pre-processing technique:

R1) The reference elements (squares in Fig. 2a) are not located in the array center and do not coincide with an element position of the prototype array.
R2) The prototype array (dots in Fig. 2a) is centrosymmetric.

Then the proposed array model is obtained by first computing the co-array signals $\boldsymbol{r}_v \in \mathbb{C}^{M'^2}$ at each switch position v from the covariance matrix $\boldsymbol{R}_v$. Assuming wide-sense stationary source signals s_q and additive noise $\boldsymbol{w}$, the signal σ_q^2 and noise σ_{w}^2 powers do not vary with time and the signals $\boldsymbol{r}_v$ from each switch position can be treated as if taken at the same time instant. Therefore the co-array signal samples $\boldsymbol{r}_v$ can be conveniently collected into a single column

$$\begin{aligned} \boldsymbol{r} &= \left(\boldsymbol{r}_1^{\mathrm{T}}, \boldsymbol{r}_2^{\mathrm{T}}, \ldots, \boldsymbol{r}_V^{\mathrm{T}}\right)^{\mathrm{T}} \\ &= \boldsymbol{A}_{\mathrm{combined,co}}\boldsymbol{p} + \sigma_{\mathrm{w}}^2 \left(\boldsymbol{i}_{M'}^{\mathrm{T}}, \ldots, \boldsymbol{i}_{M'}^{\mathrm{T}}\right)^{\mathrm{T}}. \end{aligned} \tag{18}$$

Now, the received signal $\boldsymbol{r} \in \mathbb{C}^{V \cdot M'^2}$ can be alternatively modeled by an equivalent array with the transfer matrix $\boldsymbol{A}_{\text{combined,co}} \in \mathbb{C}^{V \cdot M'^2 \times Q}$, that combines all co-arrays from each switch position. The resulting geometry is schematically depicted in Fig. 2b. Since the element positions of the co-array solely depend on the differences of the physical element positions (13), two spatially shifted copies of the prototype array can be found in the combined co-array for each reference element, centered around $\boldsymbol{d}_{\text{ref},m}$ and $-\boldsymbol{d}_{\text{ref},m}$. Therefore, the combined co-array exhibits a total of $L = 2(M' - 1)$ shifted copies with the corresponding selection matrices $\boldsymbol{B}_l$, $l = 1, \ldots, L$ such that the signals $\boldsymbol{y}_l$ represent the output of the l-th copy of the prototype array:

$$\begin{aligned} \boldsymbol{y}_l &= \boldsymbol{B}_l \boldsymbol{r} \\ &= \boldsymbol{A}_{\text{prot}} \boldsymbol{D}_l \boldsymbol{p}, \end{aligned} \tag{19}$$

$$\boldsymbol{D}_l = \operatorname{diag}\left(\mathrm{e}^{\mathrm{j}\frac{2\pi}{\lambda}\boldsymbol{\Delta}_l^{\mathrm{T}}\boldsymbol{e}(\boldsymbol{\theta}_1)}, \ldots, \mathrm{e}^{\mathrm{j}\frac{2\pi}{\lambda}\boldsymbol{\Delta}_l^{\mathrm{T}}\boldsymbol{e}(\boldsymbol{\theta}_Q)} \right), \tag{20}$$

where $\Delta_l = (\Delta_{x,l}, \Delta_{y,l}, \Delta_{z,l})^{\mathrm{T}}$ is the spatial shift of the l-th (virtual) copy and $\boldsymbol{A}_{\text{prot}}$ is the transfer matrix of the prototype array. Using the ceiling function for $m = \lceil \frac{l}{2} \rceil$, the following relationship for the spatial shift can be found

$$\Delta_l = \begin{cases} +\boldsymbol{d}_{\text{ref},\lceil \frac{l}{2} \rceil} & l \text{ even}, \\ -\boldsymbol{d}_{\text{ref},\lceil \frac{l}{2} \rceil} & l \text{ odd}. \end{cases} \tag{21}$$

It is worth noting, that when selecting the unique rows corresponding to the copies of the prototype array, any contribution of the noise disappears (19). This is due to the fact, that the vector $\boldsymbol{i}_M$ only has non-zero entries in the rows that correspond to the virtual array elements located in the origin. Following the proposed rules, the element positions of the L spatially shifted prototype array copies will not coincide with the origin. Nevertheless, the equivalent source signals $\boldsymbol{p}$ of the proposed model (18) still behave like fully coherent sources.

Spatial smoothing, initially introduced by Evans et al. [14] and as described in Section II, aims at restoring the rank of a spatial covariance matrix of an ULA. In [15], Friedlander and Weiss noted, that the spatial smoothing technique can be applied to any array, that can be divided into spatially shifted sub-arrays of the same geometry. Generally speaking, an array is amenable to spatial smoothing, if the transfer matrix $\boldsymbol{A}_l, l = 1, \ldots, L$ of the l-th sub-array can be written as:

$$\boldsymbol{A}_l = \boldsymbol{A}\boldsymbol{D}_l, \tag{22}$$

which is true for the proposed array (19).

Therefore, the spatial smoothing technique can be applied to the combined co-array array and the spatially smoothed covariance matrix $\bar{\boldsymbol{R}}_{\text{yy}}$ is found from averaging the covariance matrices of each sub-array:

$$\begin{aligned} \bar{\boldsymbol{R}}_{\text{yy}} &= \frac{1}{L} \sum_{l=1}^{L} \boldsymbol{y}_l \boldsymbol{y}_l^{\mathrm{H}} \\ &= \frac{1}{L} \boldsymbol{A}_{\text{prot}} \left(\sum_{l=1}^{L} \boldsymbol{D}_l \boldsymbol{R}_{\text{pp}} \boldsymbol{D}_l^{\mathrm{H}} \right) \boldsymbol{A}_{\text{prot}}^{\mathrm{H}}. \end{aligned} \tag{23}$$

Finally, the rank of the sufficient statistics $\bar{\boldsymbol{R}}_{\text{yy}}$ is less or equal to the number of sub-arrays L, regardless of the rank of the equivalent source signal covariance matrix $\boldsymbol{R}_{\text{pp}} = \boldsymbol{p}\boldsymbol{p}^{\mathrm{H}}$ [15, Appendix] and the maximum number of identifiable sources is $Q \leq \operatorname{rank}(\bar{\boldsymbol{R}}_{\text{yy}}) - 1$, with $\operatorname{rank}(\bar{\boldsymbol{R}}_{\text{yy}}) = \min(L, M_l)$.

B. Direction Finding

The well-known eigenstructure technique MUSIC can be used to estimate the azimuth and elevation DOAs, by finding the Q largest peaks in the MUSIC (pseudo) spectrum

$$f_{\text{MUSIC}}(\alpha, \epsilon) = \frac{1}{\boldsymbol{a}_{\text{prot}}^{\mathrm{H}}(\alpha, \epsilon) \boldsymbol{U}_{\mathrm{n}} \boldsymbol{U}_{\mathrm{n}}^{\mathrm{H}} \boldsymbol{a}_{\text{prot}}(\alpha, \epsilon)}, \tag{24}$$

where $\boldsymbol{U}_{\mathrm{n}}$ is the noise subspace obtained from the sample covariance matrix $\bar{\boldsymbol{R}}_{\text{yy}}$, as described in [13]. Furthermore, $\boldsymbol{a}_{\text{prot}}$ is the conventional array transfer vector, as defined in (3) where $\boldsymbol{d}_m$ are replaced by the element positions of the prototype array $\boldsymbol{d}_{\text{prot},m}$. In Fig. 2a, the element positions $\boldsymbol{d}_{\text{prot},m}$ are schematically depicted by blue dots and resemble the geometry of a uniform circular array (UCA) of size $M = 14$.

In contrast to the proposed MUSIC estimator (24), existing DOA estimators for time-multiplexed receiver systems often rely on a cost function, where the spatial covariance matrices $\boldsymbol{R}_v$, computed at each switch position $v = 1, \ldots, V$, enter directly. Especially the MVDR beamformer [4], combines the data from each switch position incoherently:

$$f_{\text{MVDR}}(\alpha, \epsilon) = \frac{1}{\sum_{v=1}^{V} \boldsymbol{a}_v^{\mathrm{H}}(\alpha, \epsilon) \boldsymbol{R}_v^{-1} \boldsymbol{a}_v(\alpha, \epsilon)}. \tag{25}$$

Similarly to (25), the MLE [1] incorporates the covariance matrices $\boldsymbol{R}_v$ in a single cost function that allows to estimate the DOA angles of all sources jointly.

IV. Simulation Results

This section summarizes the results of our numerical experiments, that were conducted to quantify the accuracy and resolution capabilities of the newly formed array model. For the simulations, a physical array geometry as shown in Fig. 2a, i.e. two reference elements and a uniform circular prototype array with $M = 14$ elements requiring a total of $M' = 3$ receiver channels, were assumed. Overall $Q = 3$ far-field sources impinging from the DOAs $(\alpha_q, \epsilon_q) \in \{(-112°, 31°), (141°, 43°), (46°, 45°)\}$ were simulated.

A. Direction Finding Accuracy

The root-mean-square error (RMSE) of the estimated directions of arrival $(\hat{\alpha}, \hat{\epsilon})$ was assessed for the three previously introduced estimators, i.e. the MVDR beamformer [4], the GLS estimator [1] and the proposed MUSIC estimator (24) and compared to the CRLB derived in [1]. A total of 250 independent trials were conducted using $K = 200$ samples for estimating the covariance matrices $\boldsymbol{R}_v$ from the signals $\boldsymbol{z}_{v,k}$ at each switch position $v = 1, \ldots, V$. Fig. 3 shows the RMSE results for the second source located at $(\alpha_2, \epsilon_2) = (141°, 43°)$.

All estimators are consistent with the CRLB, but in contrast to the GLS, the MUSIC estimator and the MVDR beamformer are not efficient for the studied case $Q = M'$. The

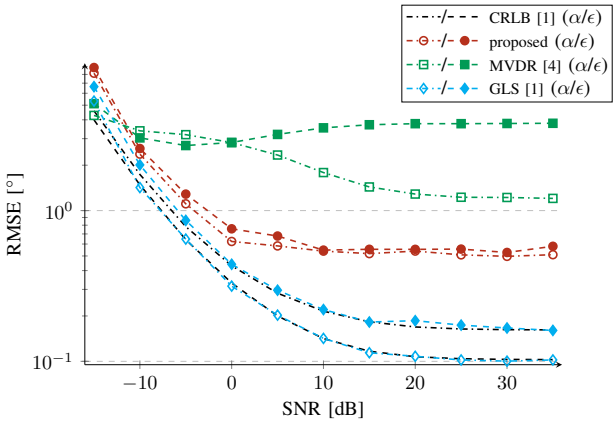

Fig. 3: DOA RMSE of the estimated azimuth and elevation angle as a function of the SNR for the source located at $(141°, 43°)$. The black and cyan line represent the CRB and the GLS estimator presented in [1], while the red and green line represent the proposed and the spectral MVDR algorithm from [4], respectively.

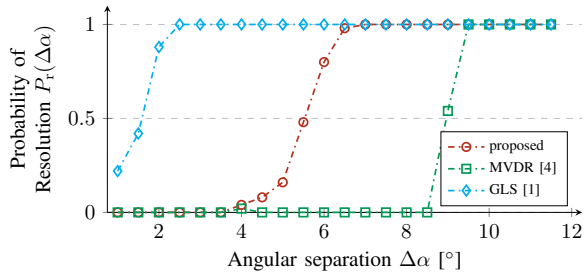

Fig. 4: Probability of resolution P_r for two closely spaced sources with equal power, separated in azimuth by $\Delta\alpha$ degrees.

MUSIC estimator shows a better performance than the MVDR beamformer, in the sense of a lower RMSE. Moreover for high SNR values, a saturation effect of the RMSE can be observed for all estimators. This is to be expected and is inherent to the problem of finding more sources than available sensors/receiver channels, as discussed in [1] and [11].

B. Probability of Resolution

The probability of resolution was analyzed using 250 independent numerical experiments. The angular separation $\Delta\alpha$ in azimuth between two sources of equal power was varied from $1-12°$. Moreover, a signal-to-noise ratio of $5\,\mathrm{dB}$ was assumed, while the elevation angle ϵ was kept constant at $0°$. The sources are deemed to be resolved, if the DOA estimation error is less than half of the angular separation for both sources, i.e. $|\hat{\alpha}_i - \alpha_i| < \Delta\alpha/2,\ i = 1, 2$ [11].

Fig. 4 plots the probability of resolution P_r against the angular separation $\Delta\alpha$. As expected, the MVDR beamformer has the worst performance. In contrast to this, the MUSIC estimator with the proposed pre-processing techniques is able to resolve sources separated by $6°$ or more at $5\,\mathrm{dB}$ SNR. The GLS estimator [1] offers the best resolution capabilities, beeing able to resolve sources separated by two degrees or more in our simulation.

V. Conclusion

In this paper, we have proposed a time-multiplex system architecture and pre-processing method that allows to identify more sources than available receiver channels. The pre-processing technique reconstructs the data of a centrosymmetric prototype array, as if it was simultaneously sampled. Therefore, after the pre-processing, the data is amenable to conventional super-resolution estimators like MUSIC and other well-known array processing techniques.

In numerical simulations, it was verified that the MUSIC estimator using the proposed data reconstruction technique, is consistent with the CRB and offers a better accuracy than the considered MVDR beamformer, that incoherently processes the data collected in each switching cycle. Moreover, as expected, the MUSIC estimator is able to resolve closely spaced sources very well. In contrast to the GLS/MLE, the proposed MUSIC estimator has a lower computational complexity, which is beneficial with regards to run time and power consumption.

References

[1] J. Sheinvald and M. Wax, "Direction finding with fewer receivers via time-varying preprocessing," *IEEE Transactions on Signal Processing*, vol. 47, no. 1, pp. 2–9, 1999.

[2] ——, "Localization of multiple signals using subarrays data," in *1995 International Conference on Acoustics, Speech, and Signal Processing*, vol. 3, 1995, pp. 2112–2115 vol.3.

[3] E. Fishler and H. Messer, "Multiple source direction finding with an array of M sensors using two receivers," in *Proceedings of the Tenth IEEE Workshop on Statistical Signal and Array Processing (Cat. No.00TH8496)*, 2000, pp. 86–89.

[4] W. Wu, C. C. Cooper, and N. A. Goodman, "Switched-element direction finding," *IEEE Transactions on Aerospace and Electronic Systems*, vol. 45, no. 3, pp. 1209–1217, 2009.

[5] C. Steffes, C. Allmann, and M. Oispuu, "Fused single sensor emitter localization using time-multiplex AOA and S4TDOA measurements," in *2018 Sensor Data Fusion: Trends, Solutions, Applications (SDF)*, 2018, pp. 1–6.

[6] M. Ibrahim, V. Ramireddy, A. Lavrenko, J. König, F. Römer, M. Landmann, M. Grossmann, G. Del Galdo, and R. S. Thomä, "Design and analysis of compressive antenna arrays for direction of arrival estimation," *Signal Processing*, vol. 138, pp. 35–47, 2017.

[7] S. U. Pillai, Y. Bar-Ness, and F. Haber, "A new approach to array geometry for improved spatial spectrum estimation," *Proceedings of the IEEE*, vol. 73, no. 10, pp. 1522–1524, 1985.

[8] S. Pillai and F. Haber, "Statistical analysis of a high resolution spatial spectrum estimator utilizing an augmented covariance matrix," *IEEE Transactions on Acoustics, Speech, and Signal Processing*, vol. 35, no. 11, pp. 1517–1523, 1987.

[9] W. Ma, T. Hsieh, and C. Chi, "DOA estimation of quasi-stationary signals via Khatri-Rao subspace," in *2009 IEEE International Conference on Acoustics, Speech and Signal Processing*, 2009, pp. 2165–2168.

[10] P. Pal and P. P. Vaidyanathan, "Nested arrays: A novel approach to array processing with enhanced degrees of freedom," *IEEE Transactions on Signal Processing*, vol. 58, no. 8, pp. 4167–4181, 2010.

[11] M. Wang and A. Nehorai, "Coarrays, MUSIC, and the Cramér–Rao bound," *IEEE Transactions on Signal Processing*, vol. 65, no. 4, pp. 933–946, 2017.

[12] A. Moffet, "Minimum-redundancy linear arrays," *IEEE Transactions on Antennas and Propagation*, vol. 16, no. 2, pp. 172–175, 1968.

[13] R. Schmidt, "Multiple emitter location and signal parameter estimation," *IEEE Transactions on Antennas and Propagation*, vol. 34, no. 3, pp. 276–280, 1986.

[14] J. Evans, D. Sun, and J. Johnson, "Application of advanced signal processing techniques to angle of arrival estimation in atc navigation and surveillance systems," 1982.

[15] B. Friedlander and A. J. Weiss, "Direction finding using spatial smoothing with interpolated arrays," *IEEE Transactions on Aerospace and Electronic Systems*, vol. 28, no. 2, pp. 574–587, 1992.